Transfer or duplication of this document as well as the utilization or communication of its contents are prohibited unless explicit authorization is granted. Violations will be liable for compensation. All rights reserved for patent, utility model or designs registrations. 除非给予明确授权，否则禁止转让、复制、利用、交流本文件的内容。违犯者将负赔偿责任。本公司保留对涉及发明、实用新型和外观专利的所有权利。

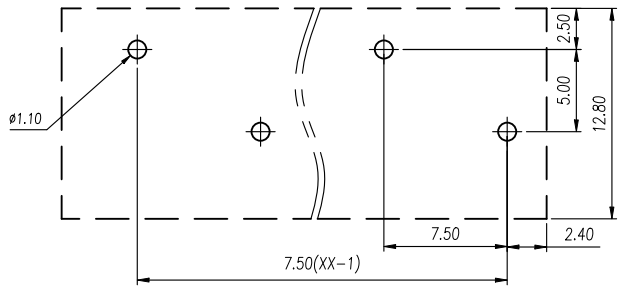

P.C.B. LAYOUT

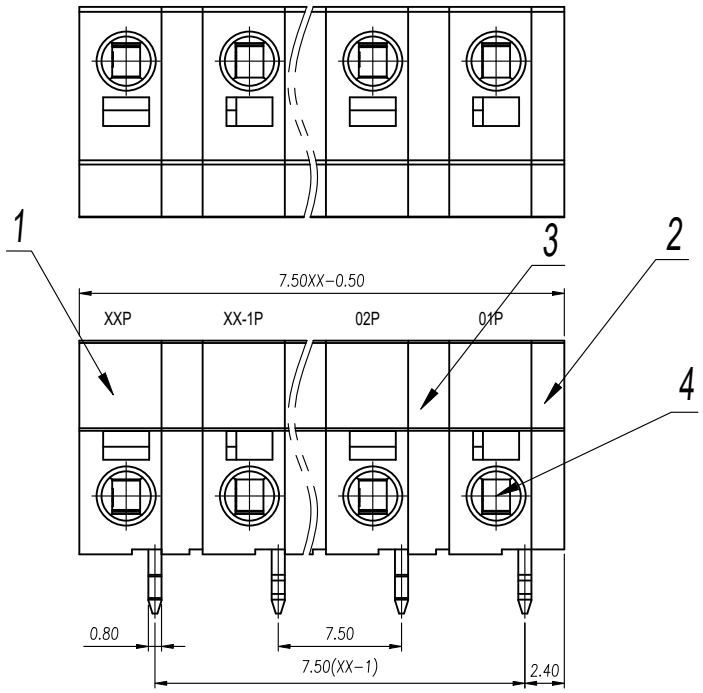

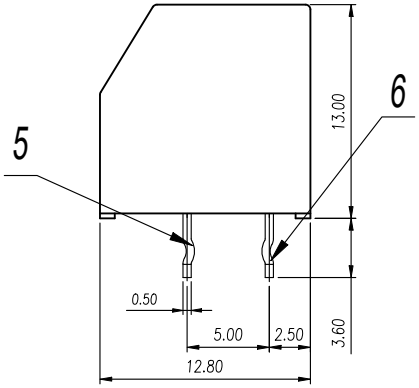

REVISION RECORD

REV.	ESCRIPTION	ECN No.	APPROVED	DATE
V0	新发行		Wubw	24.07.04

UL/CUL 技术 参数 UL/CUL Technical Data			
等 级 Use Group	B	C	D
额定电压 Rated Voltage [V]	300	-	-
额定电流 Rated Current [A]	8	-	-
接线范围 Wire Range 单/多芯线 Solid/Stranded [AWG]	20-16		
耐电压 Withstanding Voltage	1600V/1Min		
IEC 技术参数 IEC Technical Data	IEC60947-7-4		
过电压类别 Overvoltage Category	III	III	II
污染等级 Contamination Class	3	2	2
额定电压 Rated Voltage [V]	320	320	630
额定电流 Rated Current [A]	17.5	17.5	17.5
额定冲击电压 Impulse withstand voltagea [KV]	4.0	4.0	4.0
导线截面积 Conductor cross section 硬质/柔性导线 Solid/ flexible [mm²]	0.2-1.5		
材 料 Material			
绝缘材料 Insulation Material	PA66		
阻燃等级 Imflammability	UL94V-0		
导体材料 Contactor Material	铜合金 Copper alloy		
导体表面镀层 Contactive Coating	镀锡 Sn Plated		
一般参数 Other Data			
间距 Pitch /极数 Poles [mm] / [P]	7.5/ 02-24		
工作温度 Operating temperatur [°C]	-40~105		
剥线长度 Stripping Length [mm]	7~8		
焊锡温度 Soldering temperature	260°C/5S		
引针尺寸 Pin Dimensions [mm]	0.5*0.8		
PCB板孔径 PCB Hole Diameter [mm]	Ø1.10		

General Tolerances								—	⏥	⊥
variable range	to 6	over 6 to 10	over 10 to 30	over 30 to 60	over 60 to 100	over 100 to 160	over 160 to	to 10	over 10 to 100	over 100 to
tolerance	±0.20	±0.30	±0.50	±0.70	±1.00	±1.30	±1.60	0.10	0.30	0.60

ITEM	NAME OF PART	MATERIAL	NOTES
6	Pin header2	Copper Alloy	Sn Plated
5	Pin header1	Copper Alloy	Sn Plated
4	Spring	Stainless steel	/
3	Cover2	PA66	UL94V-0
2	Cover1	PA66	UL94V-0
1	Housing1	PA66	UL94V-0

DES.	Wubw	DATE	24.07.04	UNITS	mm	THIRD ANGLE PROJECTION		
CHK.	HuHT	DATE	24.07.04	SIZE	A4	TYPE: CUSTOMER DRAWING	SHEET 1 of 1	
APP.	Jason	DATE	24.07.04	SCALE	2:1	DRAWING TYPE: SP-03	REV	V0

WANJIE 慈溪市万捷电子有限公司 CIXI WANJIE ELECTRONIC CO., LTD

PART NO.: WJ247-7.5-XXP-1Y-00A