Transfer or duplication of this document as well as the utilization or communication of its contents are prohibited unless explicit authorization is granted. Violations will be liable for compensation. All rights reserved for patent, utility model or designs registrations. 除非经予明确授权，否则禁止转让、复制、利用、交流本文件的内容。侵犯者将负赔偿责任。本公司保留对涉及发明、实用新型和外观专利的所有权利。

REVISION RECORD				
REV.	ESCRIPTION	ECN No.	APPROVED	DATE
V0	新发行		ZhaoXY	24.01.23

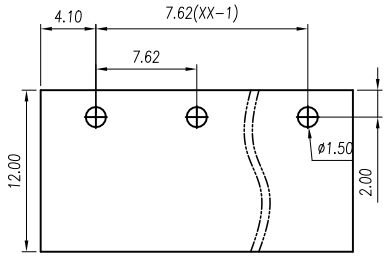

P.C.B. LAYOUT

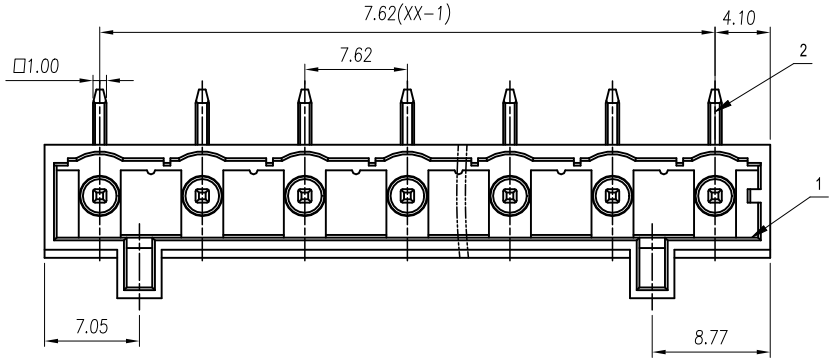

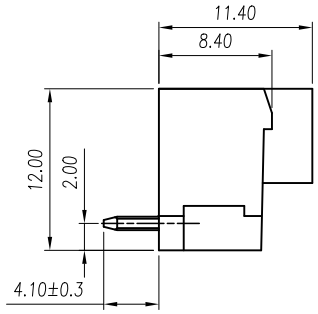

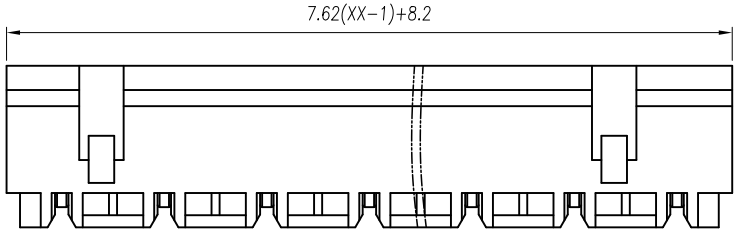

UL/CUL 技术参数 UL/CUL Technical Data				
等 级	Use Group	B	C	D
额定电压	Rated Voltage [V]	300	-	300
额定电流	Rated Current [A]	15	-	10
接线范围 单/多芯线	Wire Range Solid/Stranded [AWG]	/		
耐电压	Withstanding Voltage	1600V/1Min		
IEC 技术参数 IEC Technical Data		IEC61984		
过电压类别	Overvoltage Category	III	III	II
污染等级	Contamination Class	3	2	2
额定电压	Rated Voltage [V]	320	320	630
额定电流	Rated Current [A]	12	12	12
额定冲击电压	Impulse withstand voltagea [KV]	4	4	4
导线截面积 硬质/柔性导线	Conductor cross section Solid/ flexible [mm²]	/		
材 料	Material			
绝缘材料	Insulation Material	PA66		
阻燃等级	Imflammability	UL94V-0		
导体材料	Contactor Material	铜合金 Copper alloy		
导体表面镀层	Contactive Coating	镀锡 Sn Plated		
一般参数	Other Data			
间距 Pitch /极数 Poles	[mm] / [P]	7.62 / 02~24		
工作温度	Operating temperatur [°C]	-40~105		
焊锡温度	Soldering temperature	260°/5S		
引针尺寸	Pin Dimensions [mm]	1.0*1.0		
PCB板孔径	PCB Hole Diameter [mm]	φ1.5		

General Tolerances								—	▱	⊥
variable range	to 6	over 6 to 10	over 10 to 30	over 30 to 60	over 60 to 100	over 100 to 160	over 160 to	to 10	over 10 to 100	over 100 to
tolerance	±0.20	±0.30	±0.50	±0.70	±1.00	±1.30	±1.60	0.10	0.30	0.60

ITEM	NAME OF PART	MATERIAL	NOTES
2	Pin header	Copper Alloy	Sn Plated
1	Housing	PA66	UL94V-0

DES.	ZhaoXY	DATE	24.01.23	UNITS	mm	THIRD ANGLE PROJECTION		
CHK.	HuHT	DATE	24.01.23	SIZE	A4	TYPE: CUSTOMER DRAWING	SHEET 1 of 1	
APP.	Jason	DATE	24.01.23	SCALE	2:1	DRAWING TYPE: SP-03	REV	V0

WANJIE 慈溪市万捷电子有限公司 CIXI WANJIE ELECTRONIC CO., LTD

PART NO.: WJ0702-06XX-1Y-00A