REVISION RECORD				
REV.	ESCRIPTION	ECN No.	APPROVED	DATE
V0	新发行		ZhaoXY	24.04.01

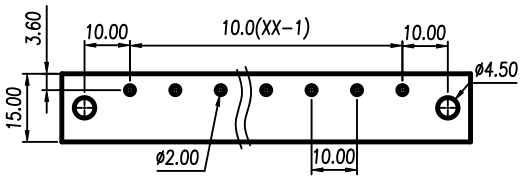

P.C.B. LAYOUT

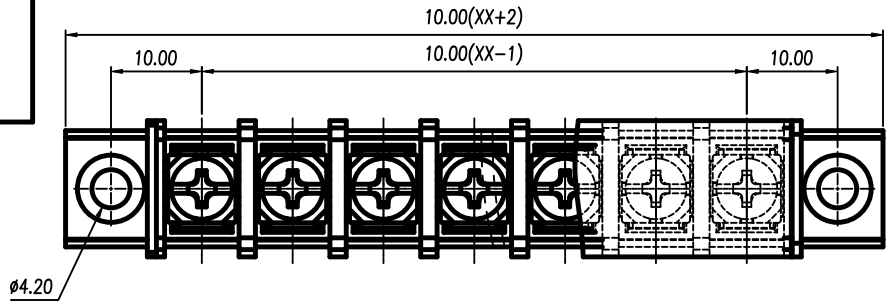

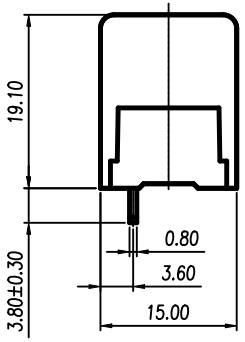

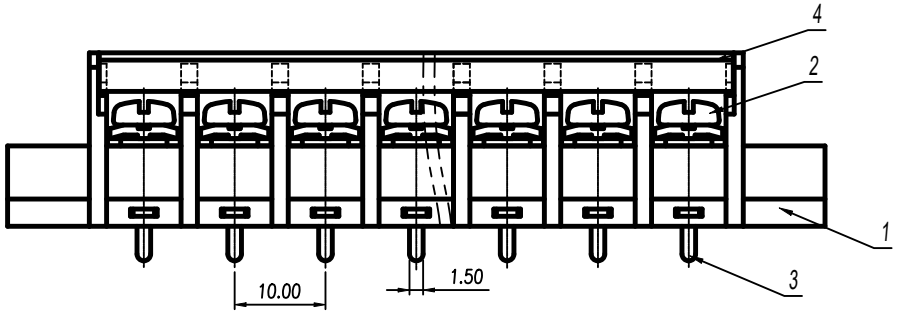

电 气 性 能/Electrical

额定电压 /Rated voltage	300V
额定电流 /Rated current	20A
接触电阻 /Contact resistance	20mΩ
绝缘电阻 /Insulation resistance	500MΩ/DC500V
使用线径 /Wire range	22~12AWG
耐 电 压/With standing voltage	AC 1600V/1 Min

机 械 性 能/Mechanica

扭 矩/Torque	1.2Nm(10.6Lb.in)
温度范围 /Temp.Range	-40°C~+105°C
瞬时温度 /MAX Soldering	+260°C, for 5 Sec

尺 寸/Dimensions

间 距/Pitch	10.0mm
极 数/Poles	2~22p

ITEM	NAME OF PART	MATERIAL	NOTES
4	Cover	PC	UL94V-2
3	Pin Header	Copper Alloy	Sn Plated
2	Screws	Steel	M4 Steel Ni plated
1	Housing	PA66	UL94V-0

General Tolerances										
variable range	to 6	over 6 to 10	over 10 to 30	over 30 to 60	over 60 to 100	over 100 to 160	over 160 to	to 10	over 10 to 100	over 100 to
tolerance	±0.20	±0.30	±0.50	±0.70	±1.00	±1.30	±1.60	0.10	0.30	0.60

DES.	ZhaoXY	DATE	24.04.01	UNITS	mm	THIRD ANGLE PROJECTION	
CHK.	HuHT	DATE	24.04.01	SIZE	A4	TYPE: CUSTOMER DRAWING	SHEET 1 of 1
APP.	Jason	DATE	24.04.01	SCALE	2:1	DRAWING TYPE: SP-03	REV V1

WANJIE 慈溪市万捷电子有限公司 CIXI WANJIE ELECTRONIC CO., LTD

PART NO.: WJ58SM-XXP-1Y-00A

FOR-0371 Rev.1.0