慈溪市万捷电子有限公司
CIXI WANJIE ELECTRONIC CO., LTD

REVISION RECORD				
REV.	DESCRIPTION	ECN No.	APPROVED	DATE

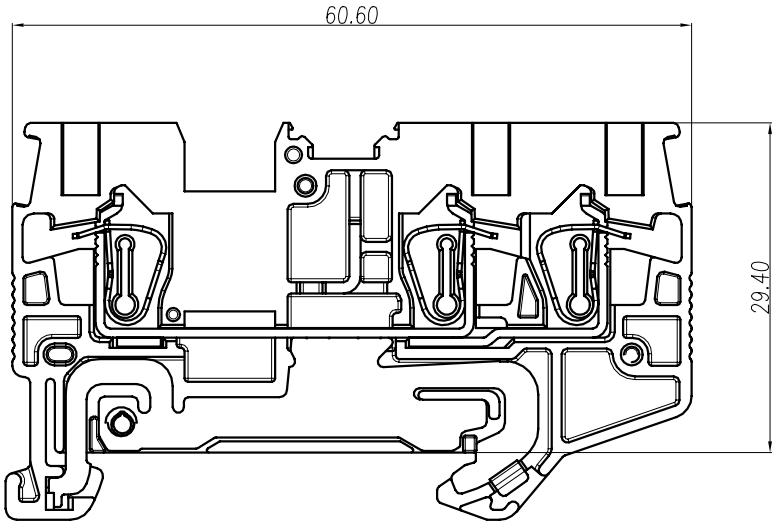

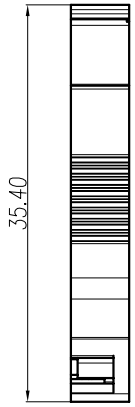

UL/CUL 技术 参数 (UL1059) UL/CUL Technical Data			
等级 Use Group	B	C	D
额定电压 Rated Voltage [V]	-	-	-
耐电压 Withstanding Voltage	2200V/1Min		
接线范围 Wire Range 单/多芯线 Solid/Stranded [AWG]	26-12		
IEC 技术参数(IEC60947-7-1/2) IEC Technical Data	IEC 60947-7-2		
过电压类别 Overvoltage Category	III		
污染等级 Contamination Class	3		
额定电压 Rated Voltage [V]	-		
额定冲击电压 Impulse withstand voltagea [KV]	8		
导线截面积 Conductor cross section			
单芯 Solid [mm²]	0.2-4.0		
柔性导线 flexible [mm²]	0.2-2.5		
柔性导线带冷压头 flexible with ferrule [mm²]	0.2-2.5		
材料 Material			
绝缘材料 Insulation Material	PA66		
阻燃等级 Imflammability	UL94V-0		
导体材料 Contactor Material	铜合金 Copper alloy		
导体表面镀层 Contactive Coating	镀锡 Sn Plated		
一般参数 Other Data			
连接点数 connection points	3		
剥线长度 Stripping Length [mm]	8-10		
导轨类型 Type of rail	DIN 35		
螺丝 Screw/扭矩 Torque(Max) [N.m]	–		
工作温度 Operating temperatur [°C]	-40~105		

linear dimension(Tolerances Standard GB/T 14486-2008)								—	▱	⊥
variable range	to 6	over 6 to 10	over 10 to 30	over 30 to 60	over 60 to 100	over 100 to 160	over 160 to	to 10	over 10 to 100	over 100 to
tolerance	±0.20	±0.30	±0.50	±0.70	±1.00	±1.30	±1.60	0.10	0.30	0.60

黄绿色/Green-Yellow	GUS2.5-103-PE-00A
颜色/Colour	订货号 /Order No.

单位 / UNITS	mm	尺寸 / SIZE	A4	比例 / SCALE	1:1	第三视角/THIRD ANGLE PROJECTION	版本 / REV	V0
慈溪市万捷电子有限公司 CIXI WANJIE ELECTRONIC CO., LTD						名称 / TITLE	GUS2.5-103-PE-00A	