REVISION RECORD				
REV.	DESCRIPTION	ECN No.	APPROVED	DATE
V0	--			2022.01.04

IEC 技术参数 IEC Technical Data	IEC61076
工作温度 Operating temperatur [°C]	-25~+105
防护等级 IP Class (IN Locked condition)	IP67
额定电压 Rated Voltage [V]	
额定电流 Rated Current [A]	
导线截面积Conductor cross section 硬质/柔性导线 Solid/ flexible [mm²]	
接线范围 Wire Range 单/多芯线 Solid/Stranded [AWG]	
材 料 Material	
绝缘材料 Insulation Material	PA 66
阻燃等级 Imflammability	UL94V-0
导体材料 Contactor Material	铜合金 Copper alloy
导体镀层 Contactive Coating	镀金 Gold Plated
螺母/螺丝Connector Nut/Screw	Brass With Nickel Plated铜镀镍
符合RoHS环保要求	

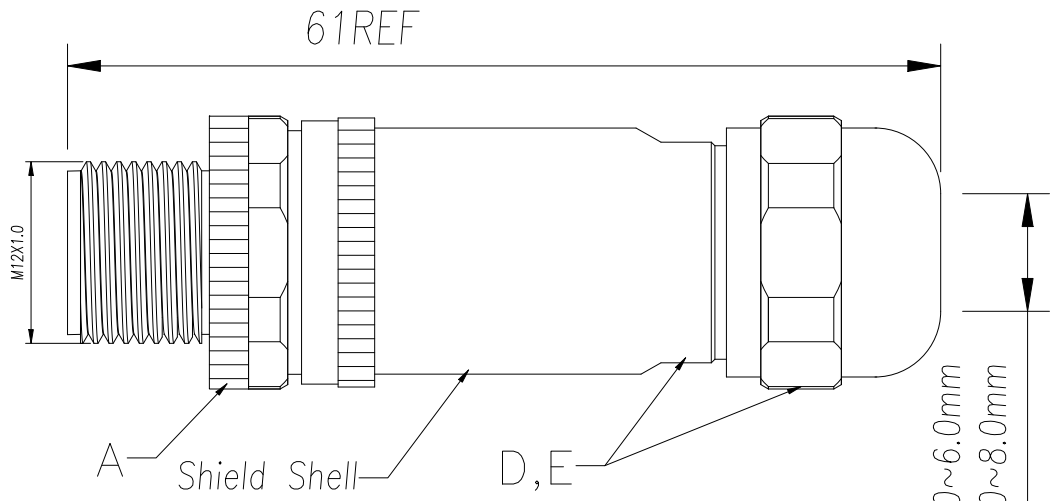

Contacts Pin数	4Pin
D-Coding	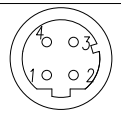
Rated Current 额定电流	4A
Rated Voltage 额定电压	250V
Wire Range (AWG)	22AWG
PART NO.品名(PG7):	M12-D04-ST2-M04-BS1
PART NO.品名(PG9):	M12-D04-ST2-M04-BS2

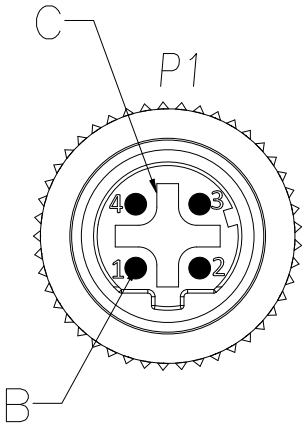

P1 Wirelist

1 _____

2 _____

3 _____

4 _____

Shield _____

编号 No.	料号 Materials.No	品名 Name	材 料 规 格 Description	单位 Unit	用量 Qty
E		O-Ring	O-Ring FKM Black	pcs	1
D		Carriers	Connector Carriers ,Brass With Nickel Plated	SET	1
C		Housing	D-Coding Male,BLACK PA66	pcs	1
B		Terminal	Male Terminal ,Brass With Gold Plated	pcs	4
A		Screw	Screw M12 X1.0,Brass With Nickel Plated	pcs	1

慈溪市万捷电子有限公司
CIXI WANJIE ELECTRONIC CO., LTD

PART NO.: M12-D04-ST2-M04-BSX

NO SPECIFIED TOLERANCE			Cus' P/N:		Order No :	---		Drawing No.:	SP-02-M00123
LINEAR	0.5~6	±0.1	DES.	JUN	DATE		UNITS	mm	THIRD ANGLE PROJECTION / PAGE
	6~30	±0.2	CHK.		DATE		SIZE	A4	1 of 1
	>30	±2%	APP.		DATE		SCALE	X:X	文件等级:外部公开
ANGLES	±1°								