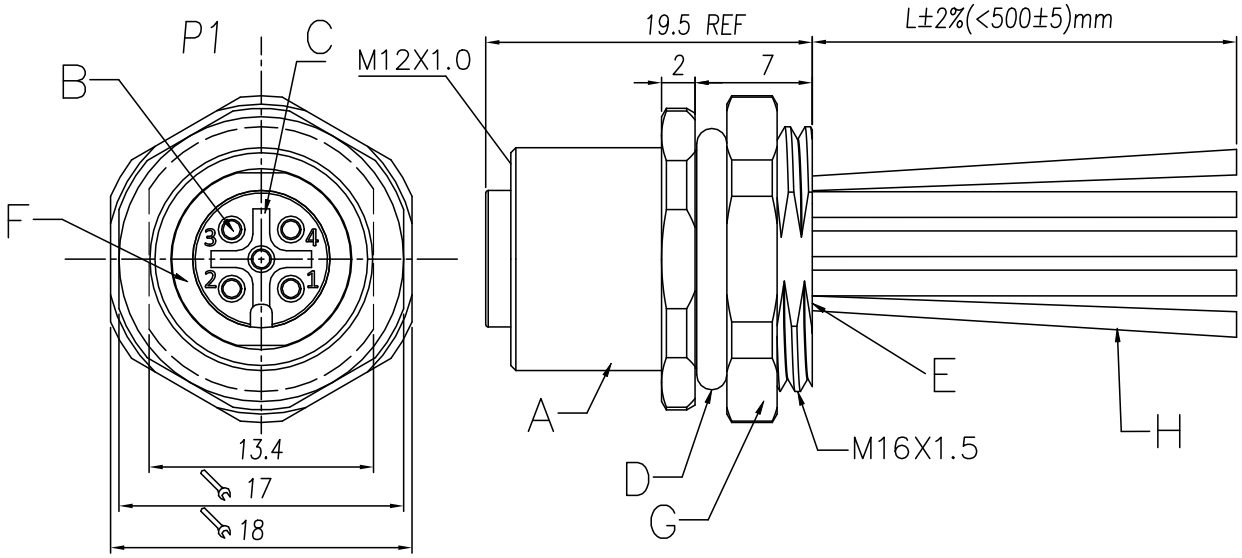

REVISION RECORD				
REV.	DESCRIPTION	ECN No.	APPROVED	DATE

IEC 技术参数 IEC Technical Data	IEC61076-2-101
工作温度 Operating temperatur [°C]	-25~+80
防护等级 IP Class (IN Locked condition)	IP67
额定电压 Rated Voltage [V]	———
额定电流 Rated Current [A]	———
导线截面积Conductor cross section 硬质/柔性导线 Solid/ flexible [mm²]	
接线范围 Wire Range 单/多芯线 Solid/Stranded [AWG]	
材 料 Material	
绝缘材料 Insulation Material	PA 66
阻燃等级 Imflammability	UL94V-0
导体材料 Contactor Material	铜合金 Copper alloy
导体镀层 Contactive Coating	镀金 Gold Plated
螺母/螺丝Connector Nut/Screw	Brass With Nickel Plated铜镀镍
符合RoHS环保要求	

Contacts Pin 数	3Pin	4Pin	5Pin	8Pin	12Pin	17Pin	
A-Coding							
Rated Current 额定电流	4A	4A	4A	2A	1.5A	1.5A	
Rated Voltage 额定电压	250V	250V	60V	30V	30V	30V	
Wire Range线范围	22AWG	22AWG	22AWG	24AWG	26AWG	26AWG	
PART NO.品名：（0.15M）	M12-A03-ST0-F02-BH1-015	M12-A04-ST0-F02-BH1-015	M12-A05-ST0-F02-BH1-015	M12-A08-ST0-F02-BH1-015	M12-A12-ST0-F02-BH1-015	M12-A17-ST0-F02-BH1-015	L=150±5mm
PART NO.品名：（0.5M）	M12-A03-ST0-F02-BH1-050	M12-A04-ST0-F02-BH1-050	M12-A05-ST0-F02-BH1-050	M12-A08-ST0-F02-BH1-050	M12-A12-ST0-F02-BH1-050	M12-A17-ST0-F02-BH1-050	L=500±10mm
Customized定制化：	.....	.....	.....	.....	.....	.....	

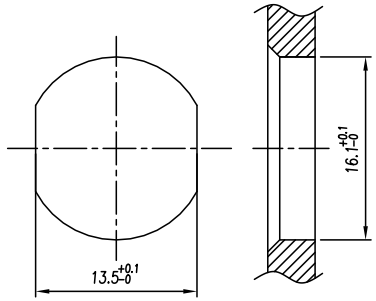

Panel cut-out

编号 No.	料号 Materials.No	品名 Name	材 料 规 格 Description	单位 Unit	用量 Qty
H		WIRE	WIRE: UL 1061	pcs	X
G		NUT	NUT M16X1.5 ,Brass With Nickel Plated	pcs	1
F		O-Ring	O-Ring FKM Green	pcs	1
E		Resin	Black epoxy resin for sealing	g	2
D		O-Ring	O-Ring FKM Black	pcs	1
C		Housing	A-Coding Female,Black PA66	pcs	1
B		Terminal	Female Terminal ,Brass With Gold Plated	pcs	X
A		Screw	Screw M12 X1.0,Brass With Nickel Plated	pcs	1

慈溪市万捷电子有限公司
CIXI WANJIE ELECTRONIC CO., LTD

PART NO.:
M12-AXX-ST0-F02-BH1-XXX

NO SPECIFIED TOLERANCE			Cus' P/N:		Order No :	---		Drawing No.:	SP-02-M00XXX
LINEAR	0.5~6	±0.1	DES.	JUN	DATE		UNITS	mm	THIRD ANGLE PROJECTION / PAGE
	6~30	±0.2	CHK.		DATE		SIZE	A4	1 of 1
	>30	±2%							
ANGLES	±1°		APP.		DATE		SCALE	X:X	文件等级：外部公开

REVISION RECORD				
REV.	DESCRIPTION	ECN No.	APPROVED	DATE

3Pin

P1	Wirelist
1	brown
3	blue
4	black

4Pin

P1	Wirelist
1	brown
2	white
3	blue
4	black

5Pin

P1	Wirelist
1	brown
2	white
3	blue
4	black
5	grey

17Pin

P1	Wirelist
1	brown
2	blue
3	white
4	green
5	pink
6	yellow
7	black
8	grey
9	red
10	violet
11	grey/pink
12	red/blue
13	white/green
14	brown/green
15	white/yellow
16	yellow/brown
17	white/grey

12Pin

P1	Wirelist
1	brown
2	blue
3	white
4	green
5	pink
6	yellow
7	black
8	grey
9	red
10	violet
11	grey/pink
12	red/blue

8Pin

P1	Wirelist
1	white
2	brown
3	green
4	yellow
5	grey
6	pink
7	blue
8	red

慈溪市万捷电子有限公司 CIXI WANJIE ELECTRONIC CO., LTD							PART NO.: M12-AXX-ST0-F02-BH1-XXX	
NO SPECIFIED TOLERANCE		Cus' P/N:		Order No :	---		Drawing No.:	SP-02-M000XX
LINEAR	0.5~6 ±0.1	DES.	Jun	DATE		UNITS	mm	THIRD ANGLE PROJECTION / PAGE
	6~30 ±0.2	CHK.		DATE		SIZE	A4	2 of 2
	>30 ±2%							
ANGLES	±1°	APP.		DATE		SCALE	X:X	文件等级:外部公开