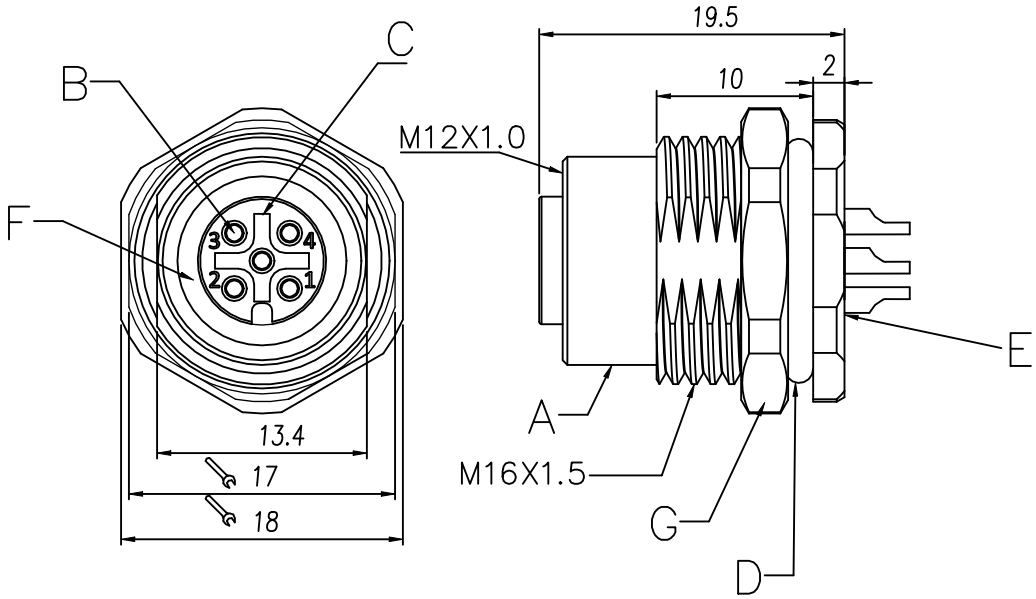

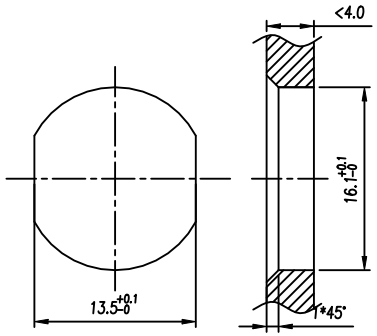

Panel cut—out

REVISION RECORD				
REV.	DESCRIPTION	ECN No.	APPROVED	DATE

IEC 技术参数 IEC Technical Data	IEC61076-2-101
工作温度 Operating temperatur [°C]	-25~+80
防护等级 IP Class (IN Locked condition)	IP67
额定电压 Rated Voltage [V]	—
额定电流 Rated Current [A]	—
导线截面积Conductor cross section 硬质/柔性导线 Solid/ flexible [mm²]	—
接线范围 Wire Range 单/多芯线 Solid/Stranded [AWG]	—
材 料 Material	
绝缘材料 Insulation Material	PA 66
阻燃等级 Imflammability	UL94V-0
导体材料 Contactor Material	铜合金 Copper alloy
导体镀层 Contactive Coating	镀金 Gold Plated
螺母/螺丝Connector Nut/Screw	Brass With Nickel Plated铜镀镍
符合RoHS环保要求	

Contacts Pin数	3Pin	4Pin	5Pin	8Pin	12Pin	17Pin
A—Coding	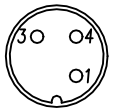	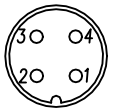	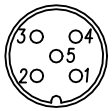			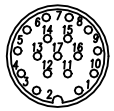
Rated Current 额定电流	4A	4A	4A	2A	1.5A	1.5A
Rated Voltage 额定电压	250V	250V	60V	30V	30V	30V
Wire Range线范围	22AWG	22AWG	22AWG	24AWG	26AWG	26AWG
PART NO.品名:	M12-A03-ST0-F02-BQ1	M12-A04-ST0-F02-BQ1	M12-A05-ST0-F02-BQ1	M12-A08-ST0-F02-BQ1	M12-A12-ST0-F02-BQ1	M12-A17-ST0-F02-BQ1

编号 No.	料号 Materials.No	品名 Name	材料规格 Description	单位 Unit	用量 Qty
G		NUT	NUT M16 X1.5,Brass With Nickel Plated	pcs	1
F		O—Ring	O—Ring FKM Green	pcs	1
E		Resin	Black epoxy resin for sealing	g	2
D		O—Ring	O—Ring FKM Black	pcs	1
C		Housing	A—Coding Female,Black PA66	pcs	1
B		Terminal	Female Terminal ,Brass With Gold Plated	pcs	X
A		Screw	Screw M12 X1.0,Brass With Nickel Plated	pcs	1

慈溪市万捷电子有限公司
CIXI WANJIE ELECTRONIC CO., LTD

PART NO.: M12-AXX-ST0-F02-BQ1

NO SPECIFIED TOLERANCE			Cus' P/N:		Order No :	---		Drawing No.:	SP-02-M000XX
LINEAR	0.5~6	±0.1	DES.	JUN	DATE		UNITS	mm	THIRD ANGLE PROJECTION / PAGE
	6~30	±0.2	CHK.		DATE		SIZE	A4	1 of 1
	>30	±2%							
ANGLES	±1°		APP.		DATE		SCALE	X:X	文件等级:外部公开